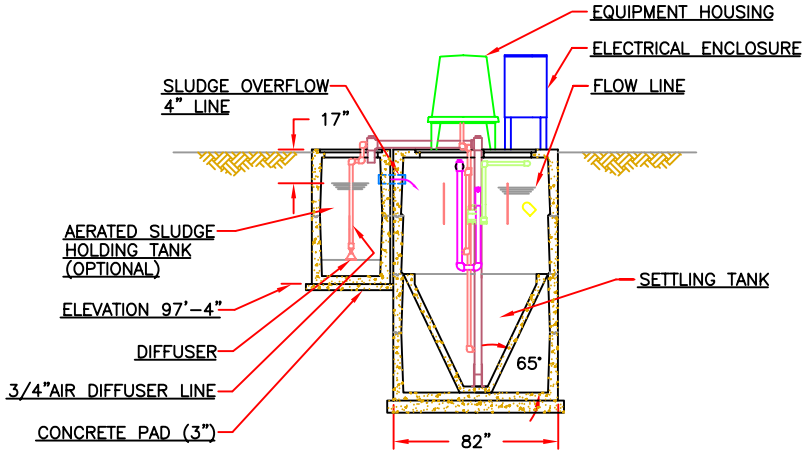

SECTION BB

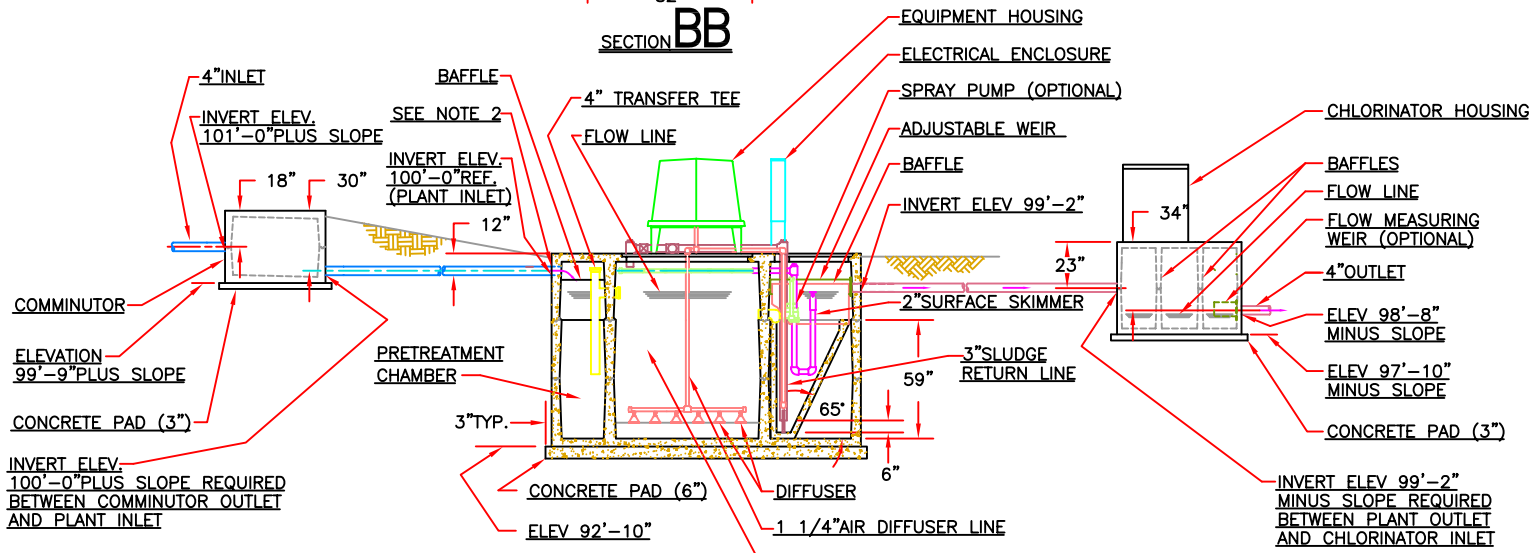

SECTION AA

NOTES:
1.FOR ADDITIONAL INFORMATION REFER TO"DESIGN CRITERIA"CHART

2.TO MINIMIZE FALL THRU PLANT LOCATE INLET INVERT 6"ABOVE FLOW LINE

REM	REV'D	PART NO.	DESCRIPTION					
I	H	G	F	E	D	C	B	A	REV.
					749	491	192	034	EN NO.
					12-96	5-82	9-76	8-72	DATE

JET INC.
CLEVELAND, OHIO

DRAWN BY: DM
DATE: 6-12-95
APPROVED BY:
DATE:
MATERIAL:
SCALE: 3/8" = 1'-0"

TITLE: COMMERCIAL PLANT (ELEVATION VIEW) 1,500 SERIES I&II

USED ON: SEE ALSO PLAN VIEW

UNLESS OTHERWISE SPECIFIED: ALL DIMENSIONS IN INCHES
DECIMAL: ± .005
FRACTION: ± 1/64
DEGREE: ± 1°

PROPRIETARY PROPERTY: THIS DRAWING IS THE PROPERTY OF JET INC. AND MAY NOT BE REPRODUCED, COPIED OR USED WITHOUT WRITTEN PERMISSION.

DRAWING NUMBER: JCP 15 E

JCP 15 E